Broîl Kîng®

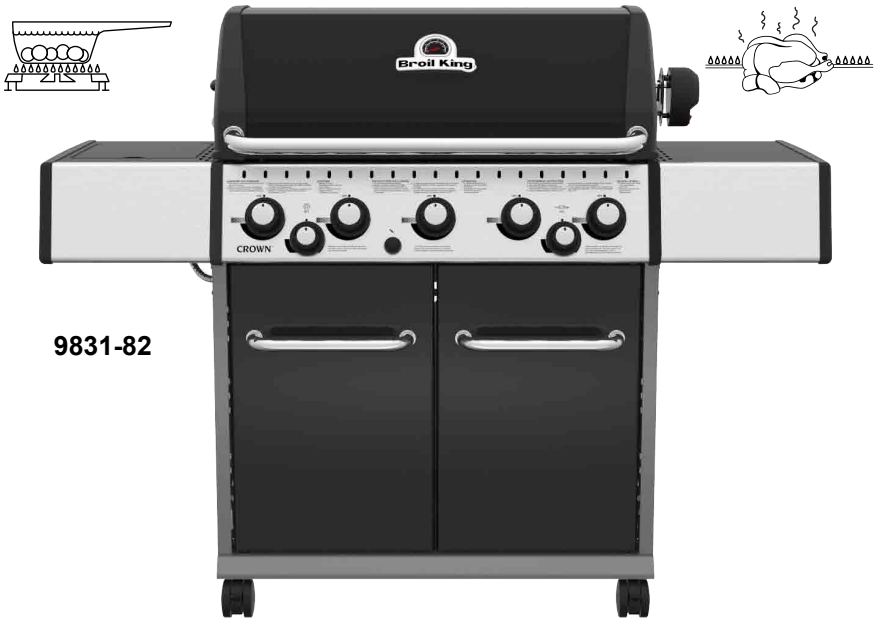

9831-82

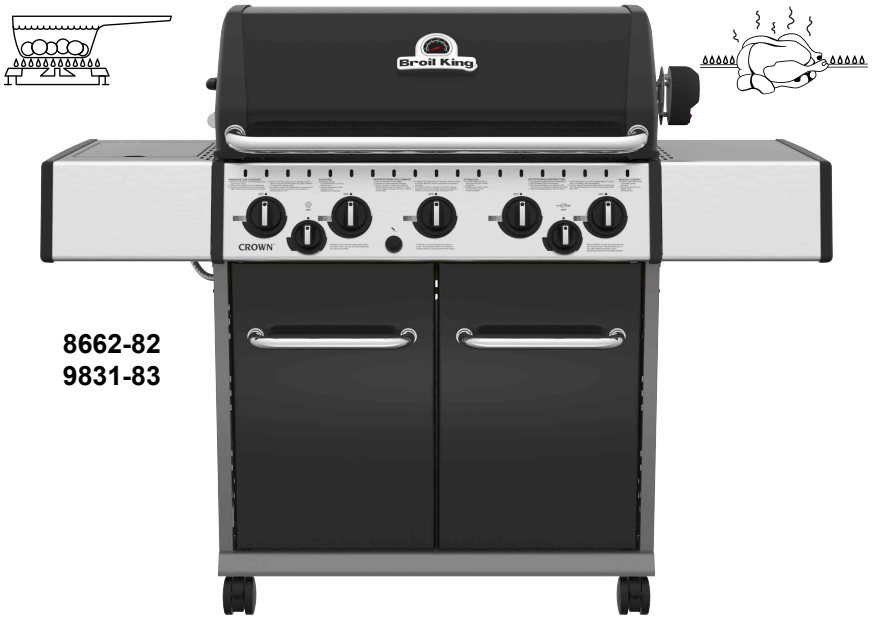

8662-82
9831-83

Onward MANUFACTURING COMPANY LIMITED
SINCE 1906
585 KUMPF DRIVE
WATERLOO, ONTARIO, CANADA

50084-E58EU Rev A 11/17

HARDWARE INCLUDED

Y-12865 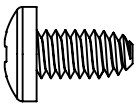 x16	Y-12310 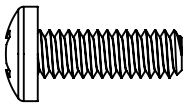 x6	S21125 x8
Y-29304 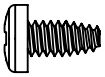 x8	S21235 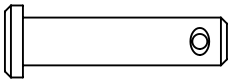 x2	S21233 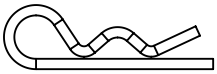 x2
Y-12857 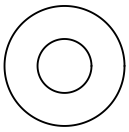 x4	Y-11551 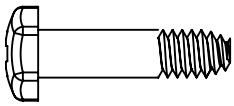 x2	Y-12124 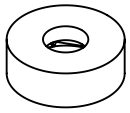 x2
S35094 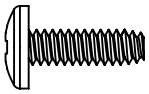 x1	20005-000 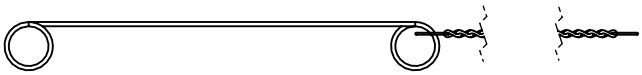 x1	
Y-29310 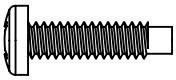 x6	Y-12870 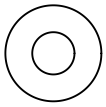 x2	Y-11793 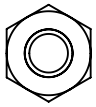 x4

TOOLS REQUIRED

Y-31223

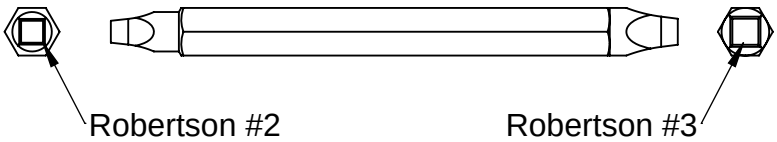

7/16"

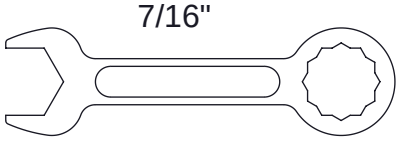

1	

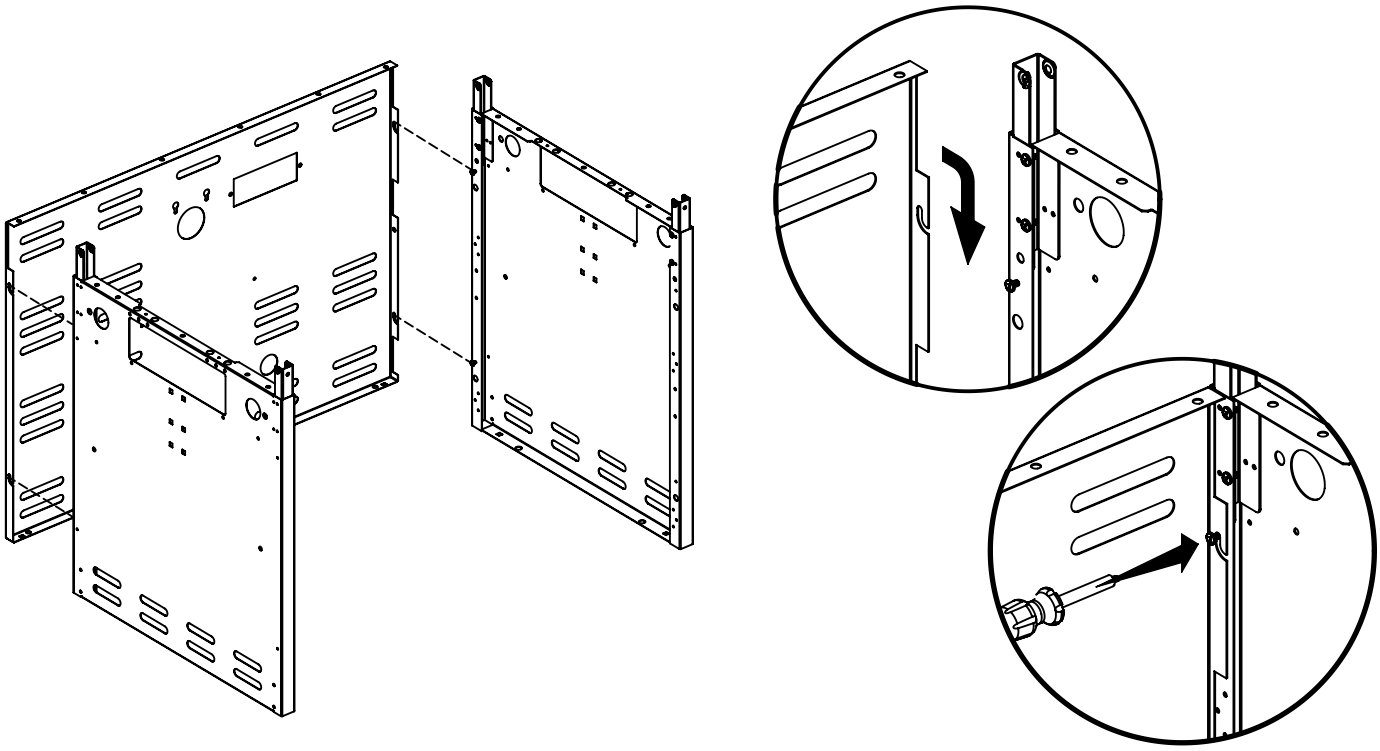

2	

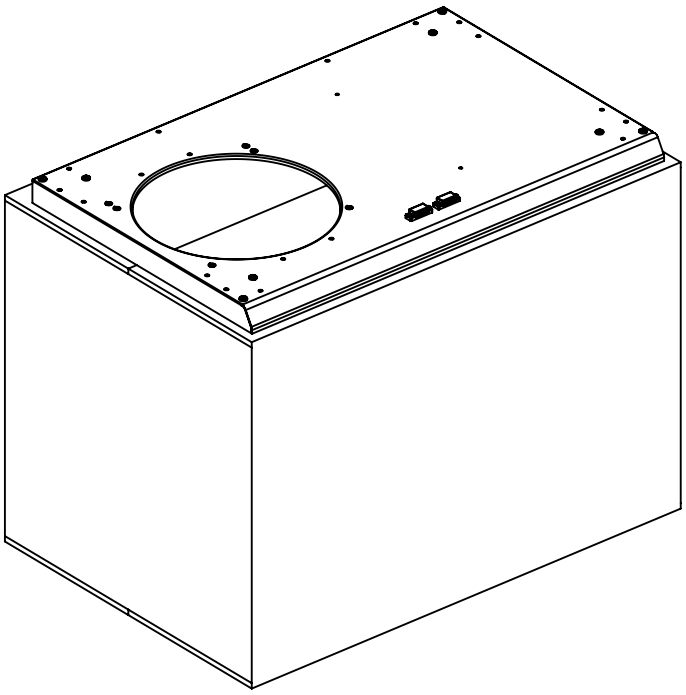

3	(6) 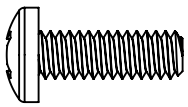

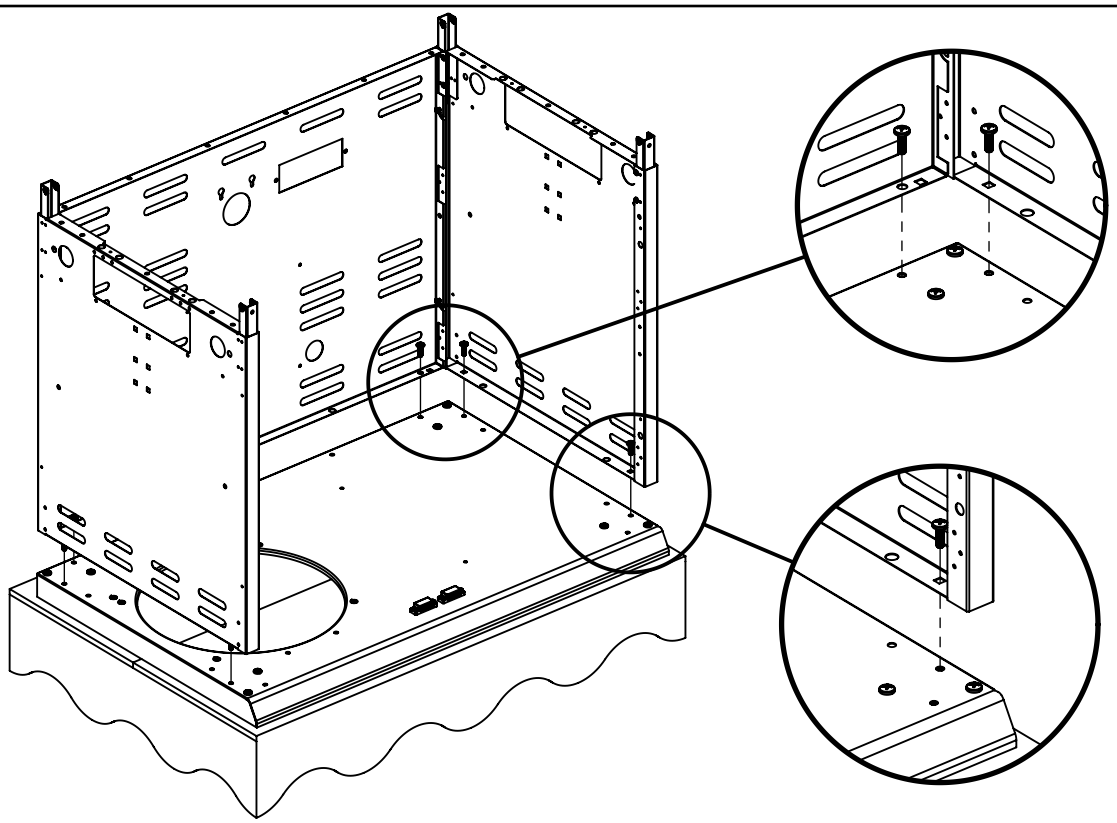

4	(4) 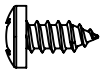

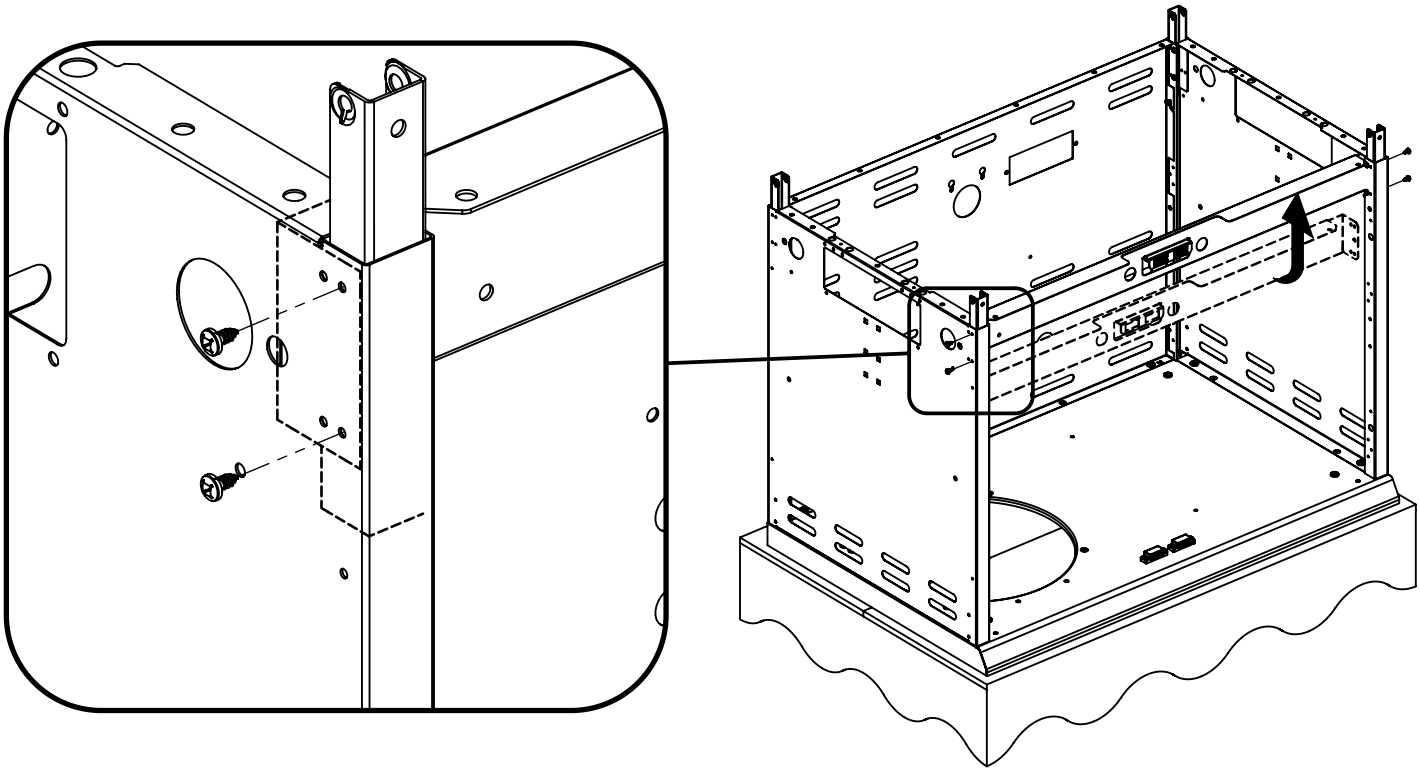

5	(4) 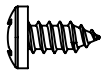 (1)

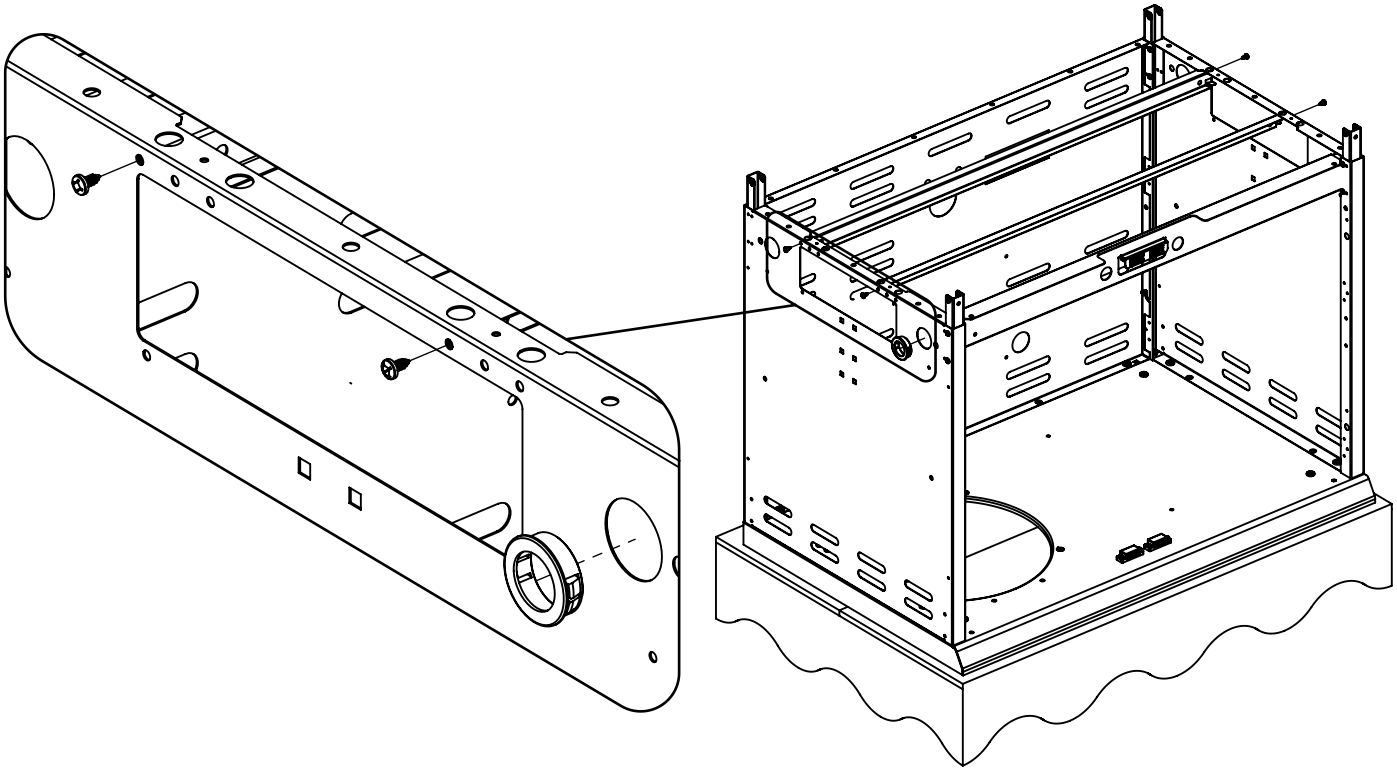

6	

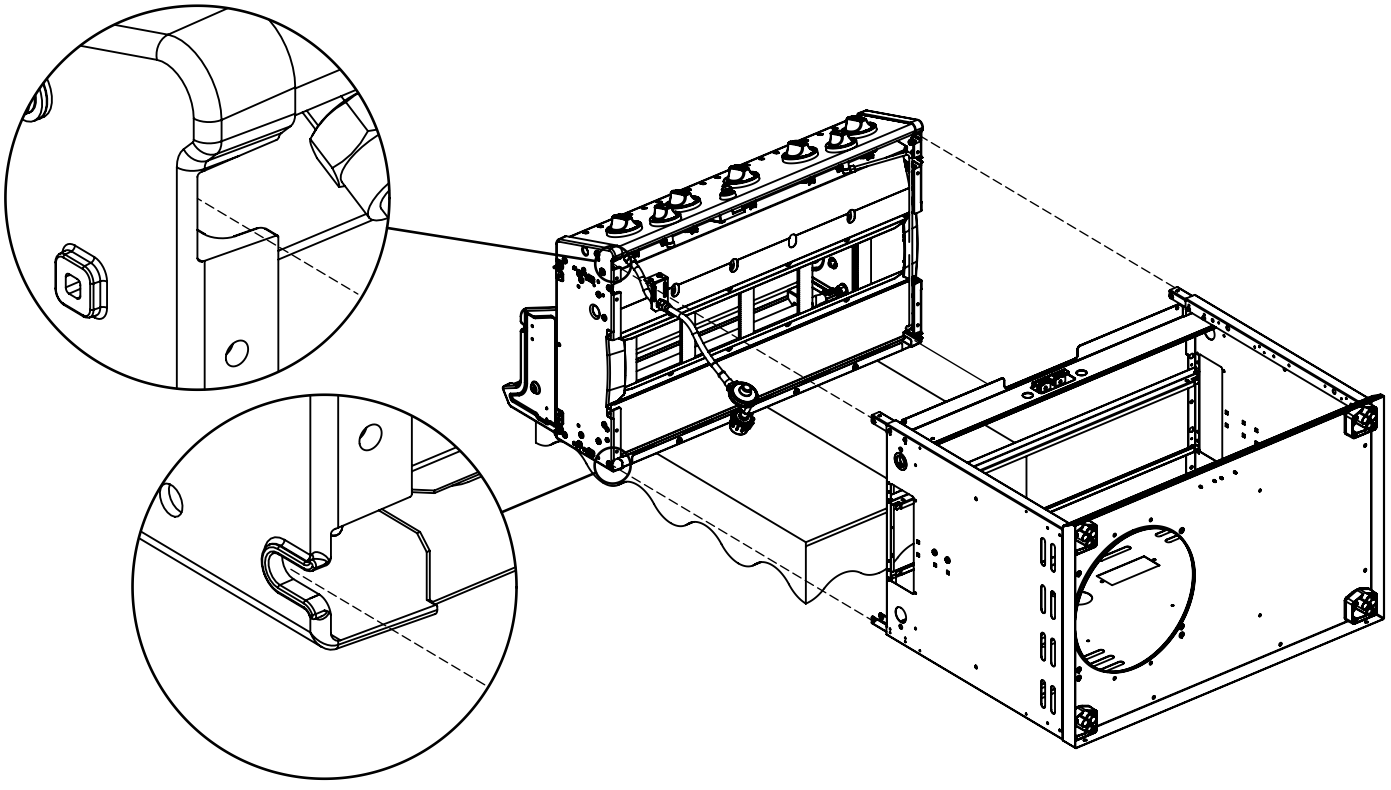

7	(2) 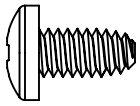

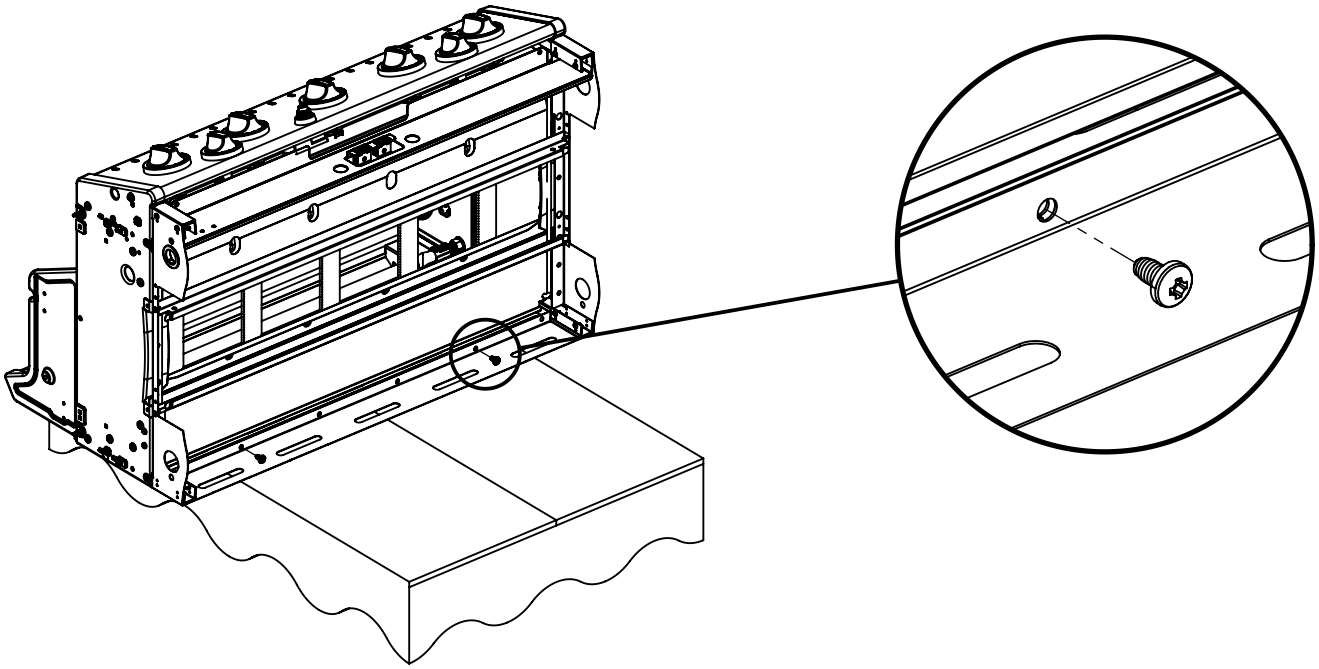

8	(4) 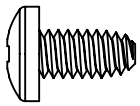

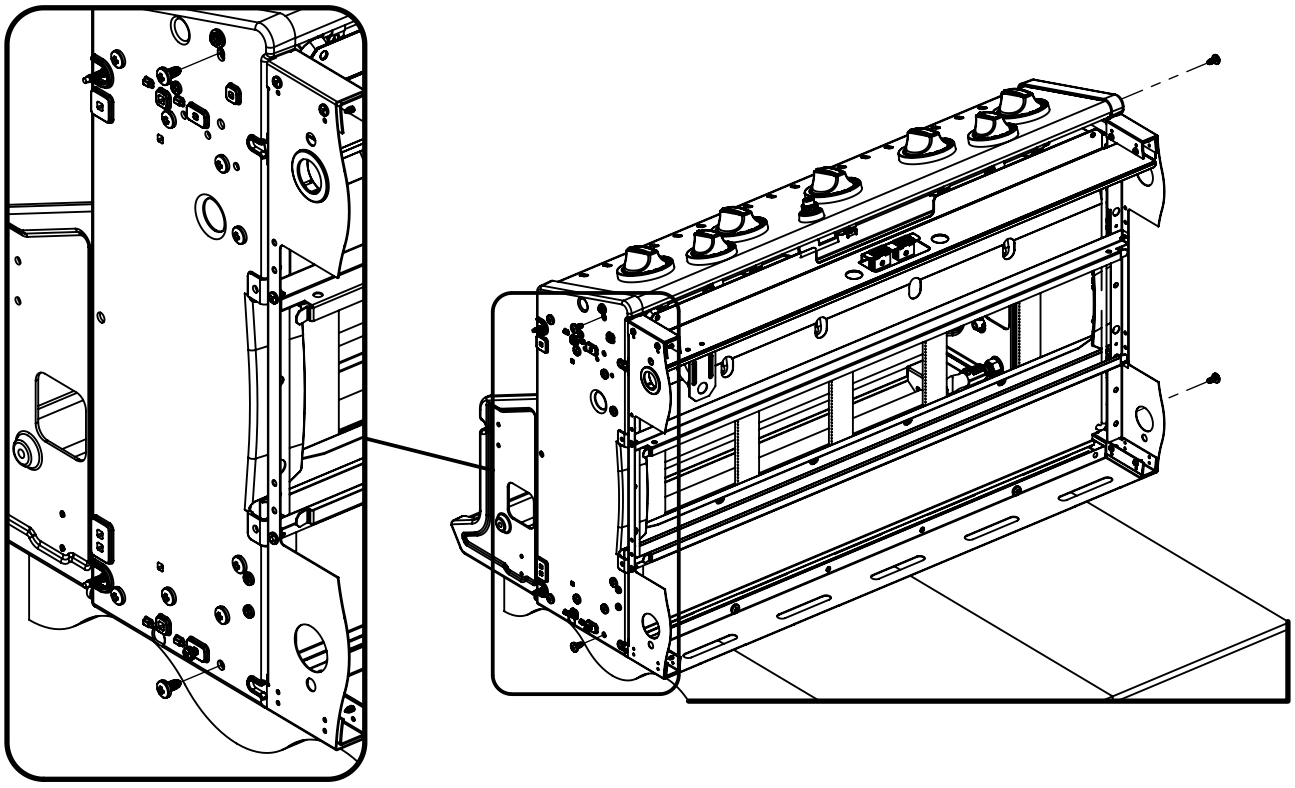

9	(2) 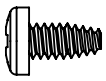

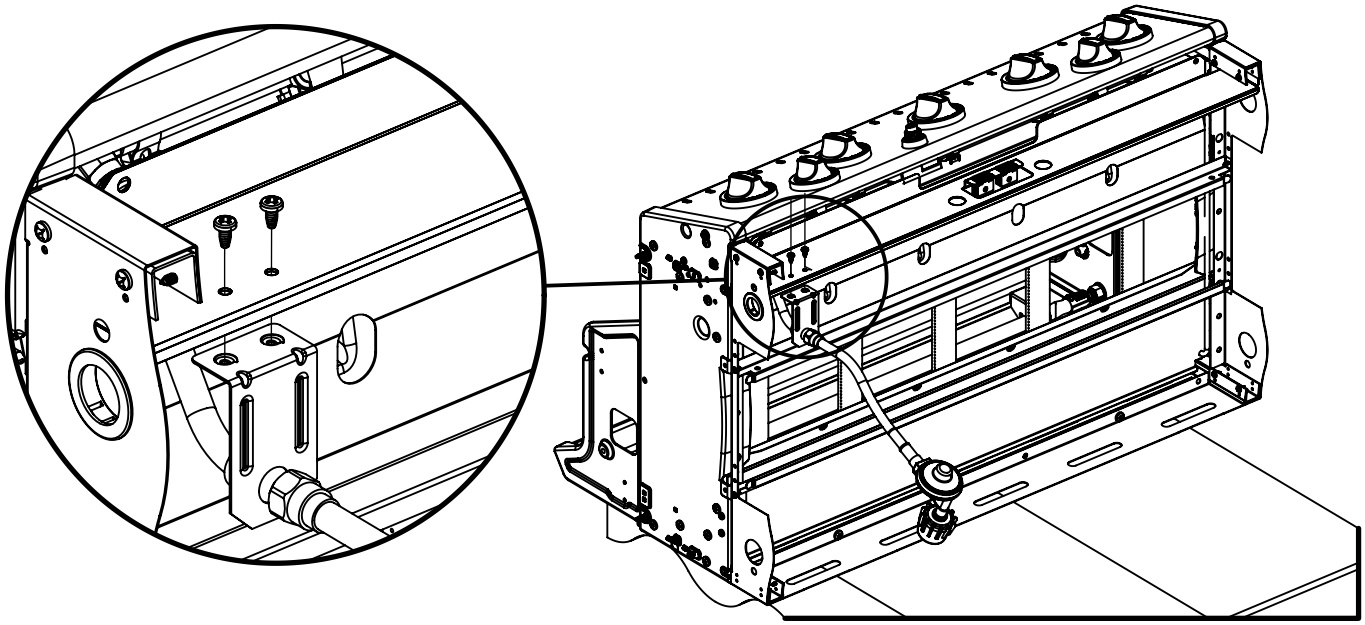

10	(4) 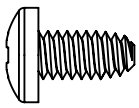 (4) 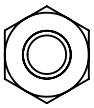

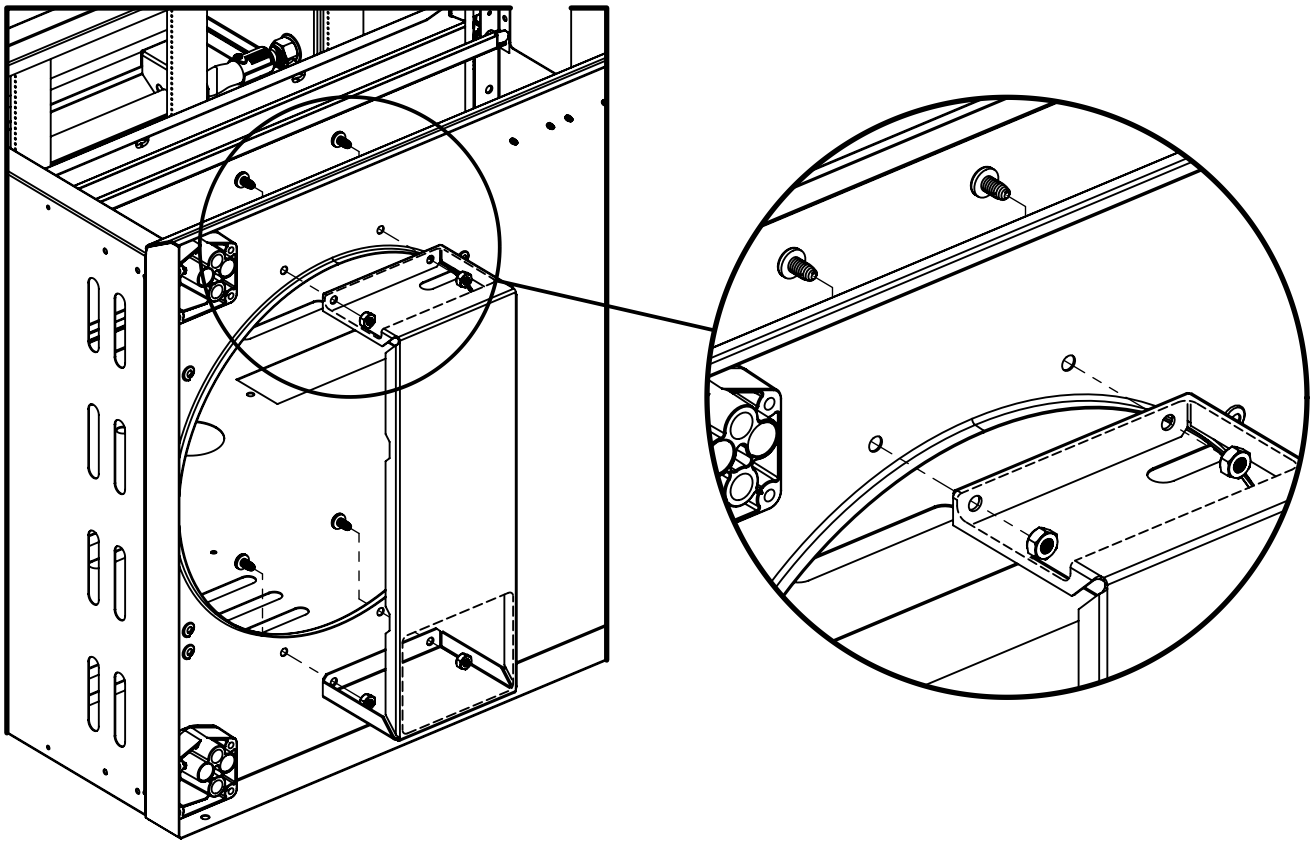

11	(2) 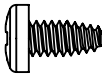

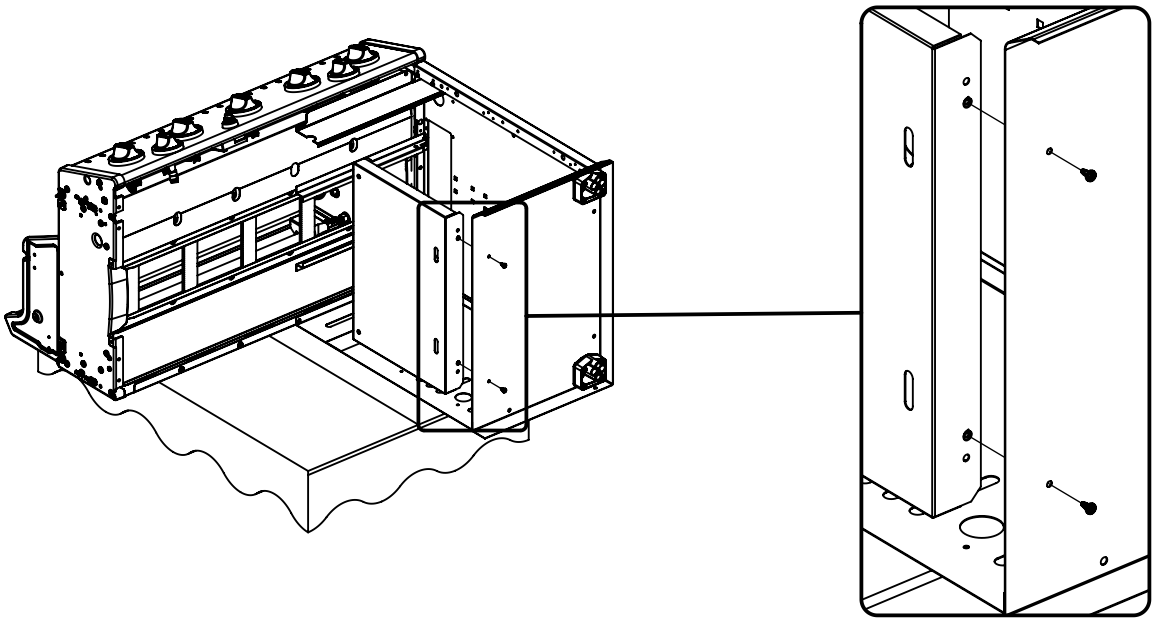

12	(2) 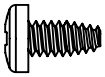 (A) (2) 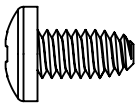 (B)

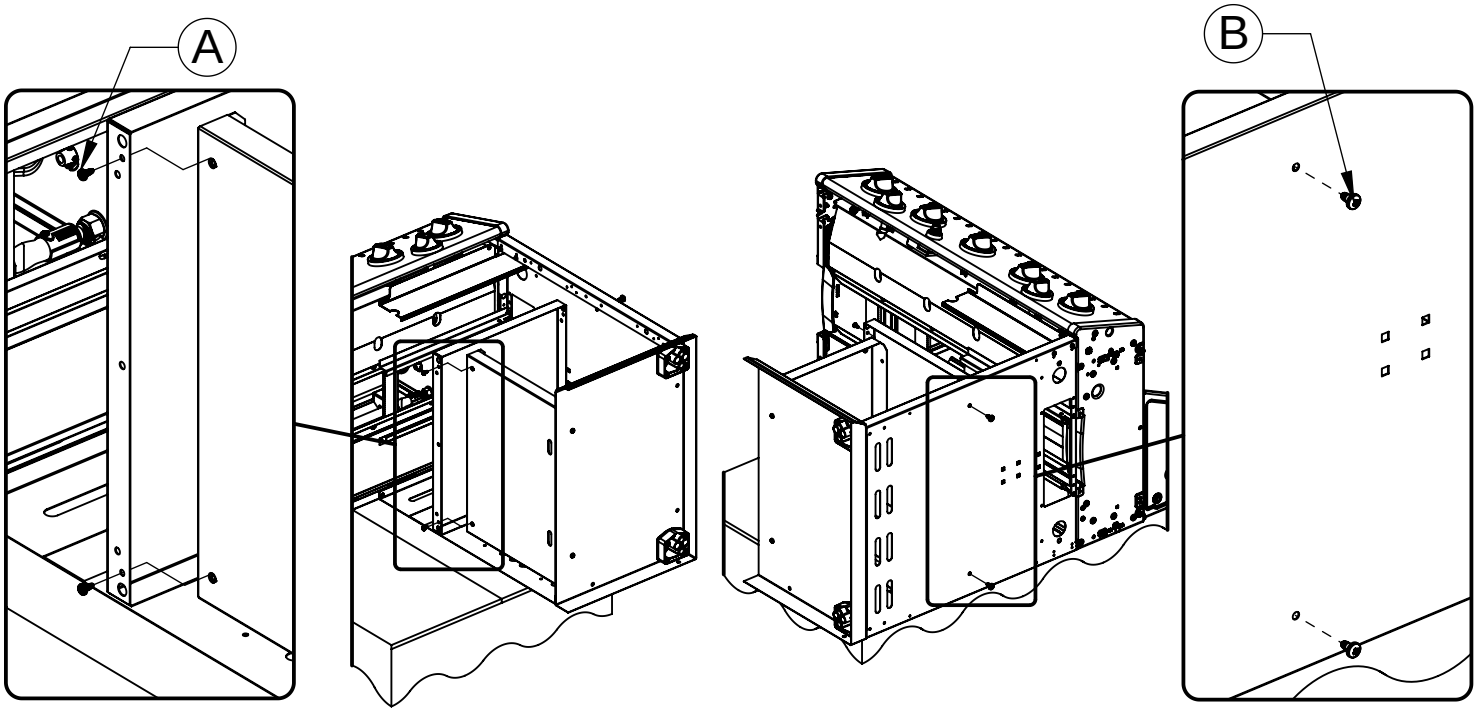

13	(4) 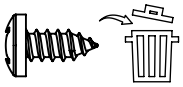

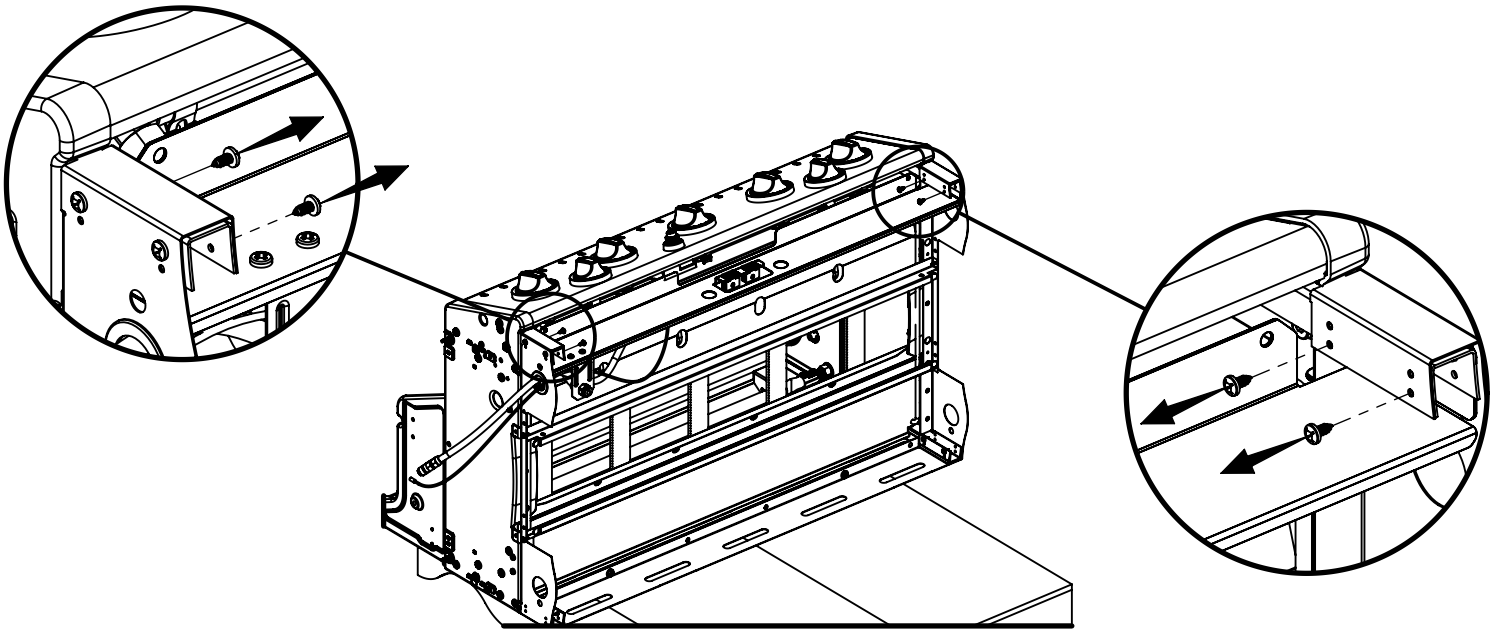

14	(4) 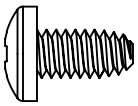 (4) 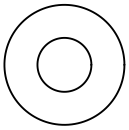

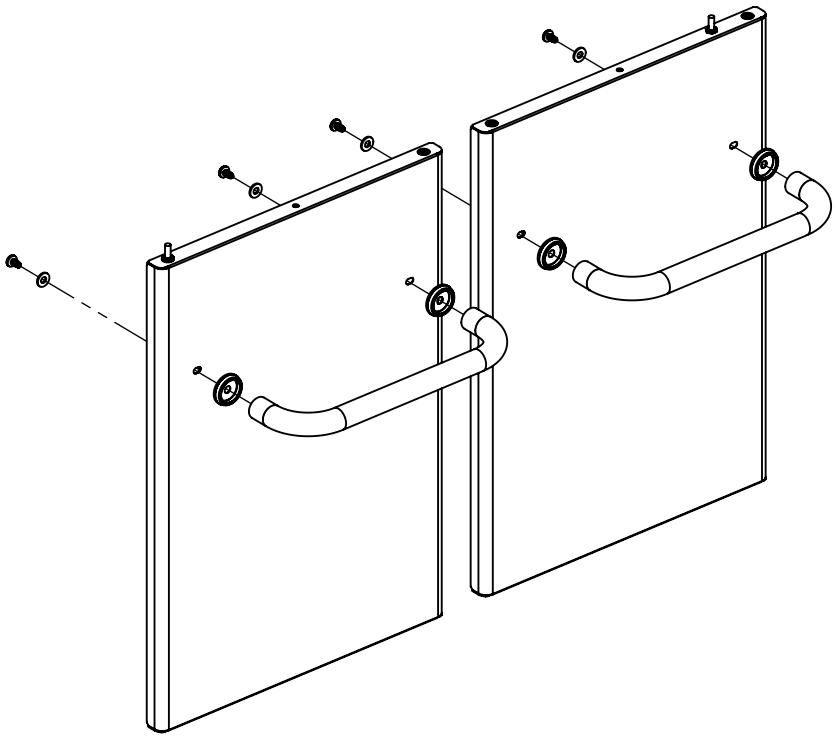

15

(2) 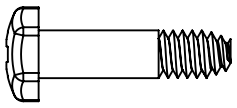 (2) 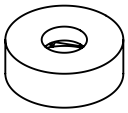

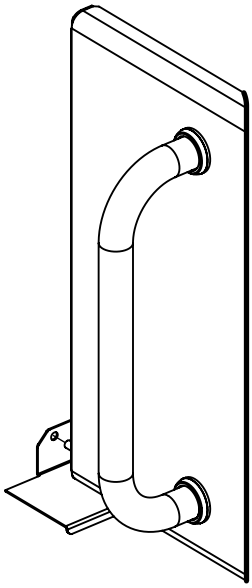

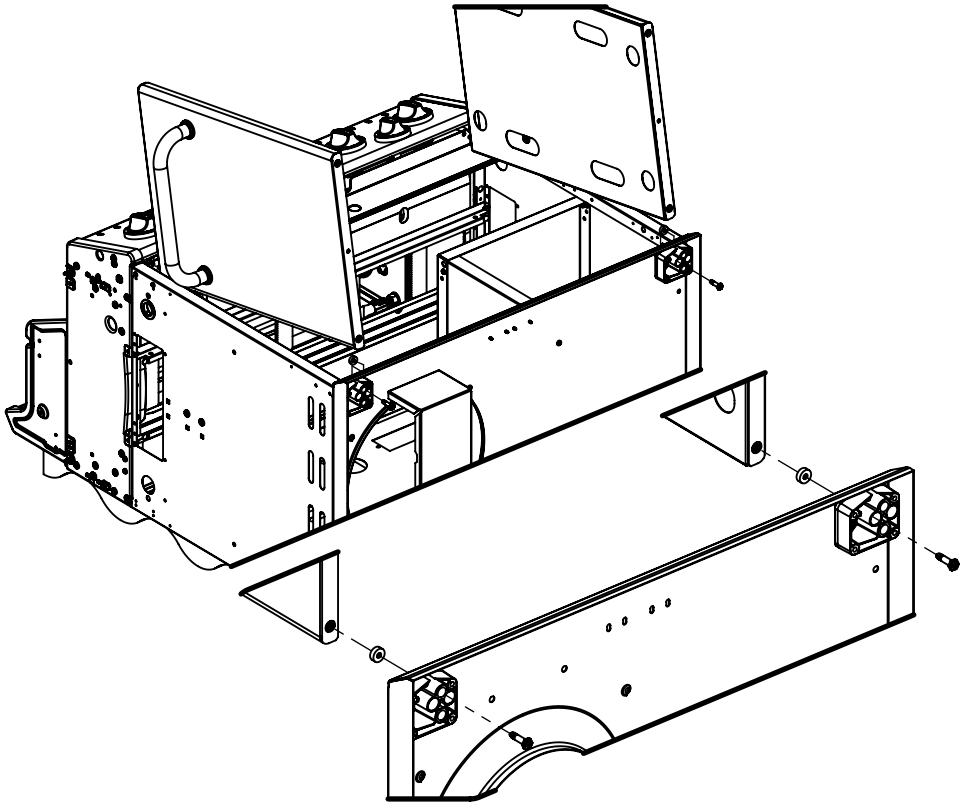

16

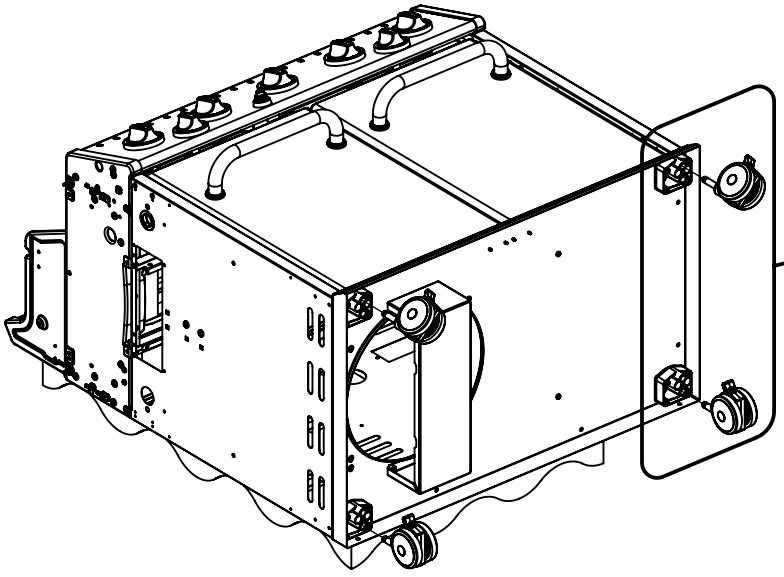

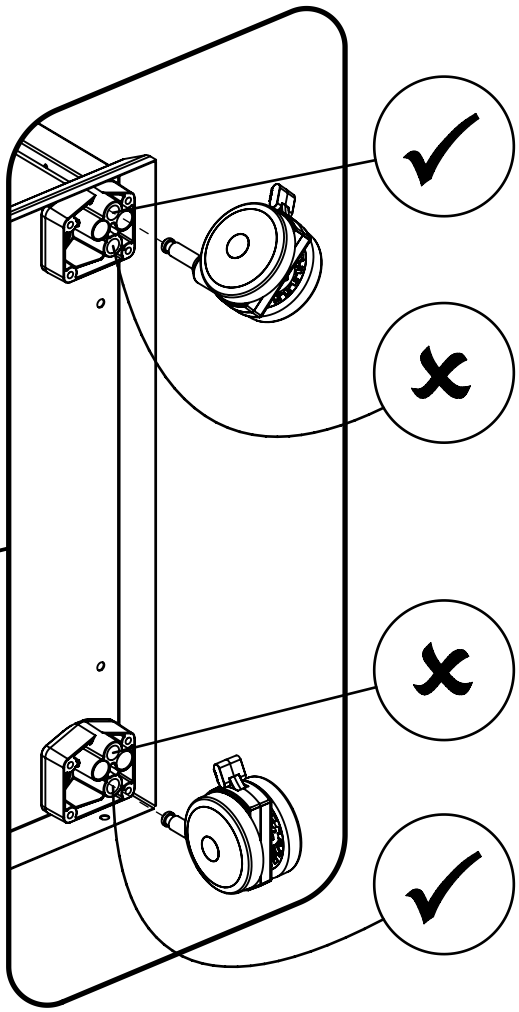

17	(2) 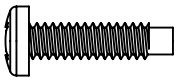

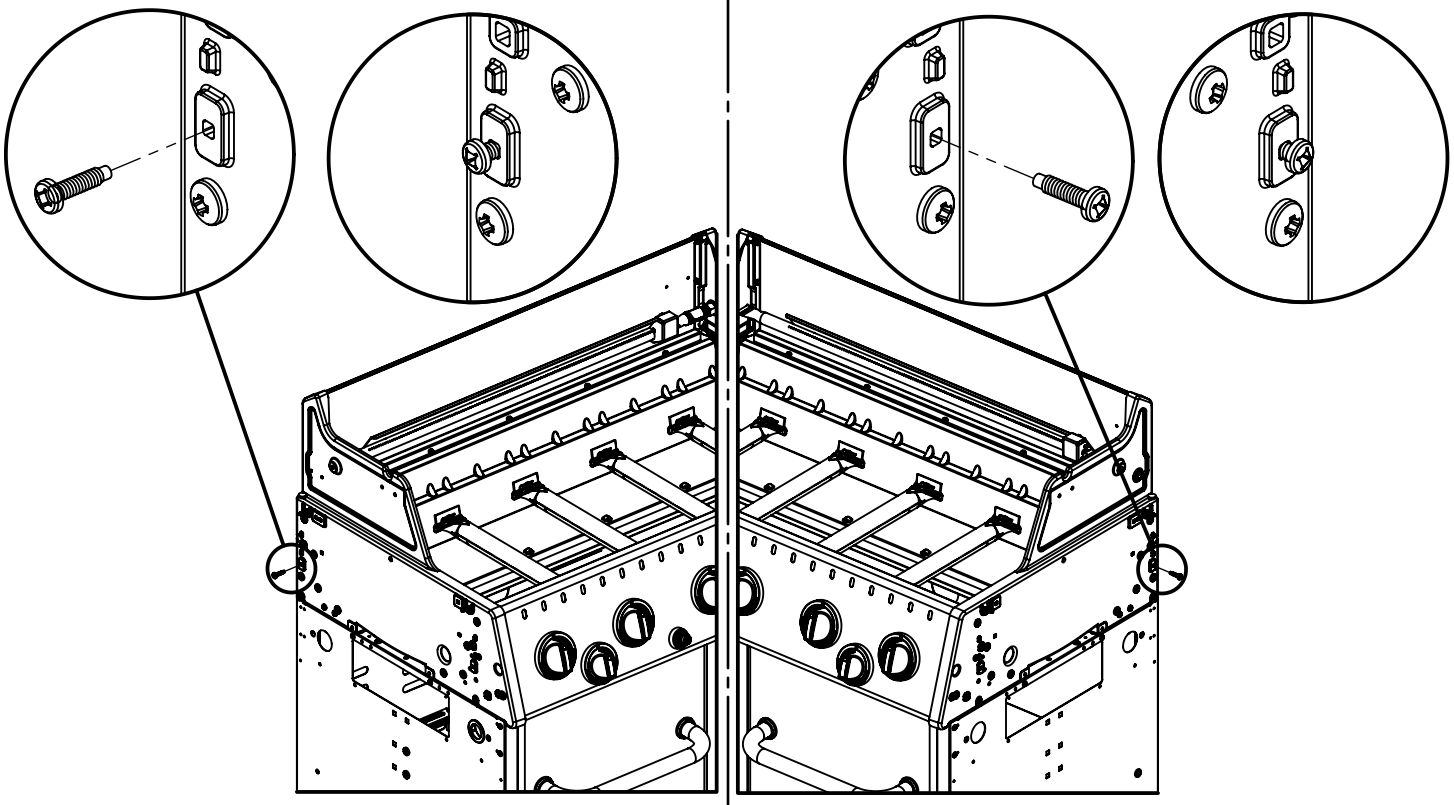

18	(2) 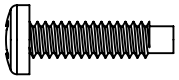

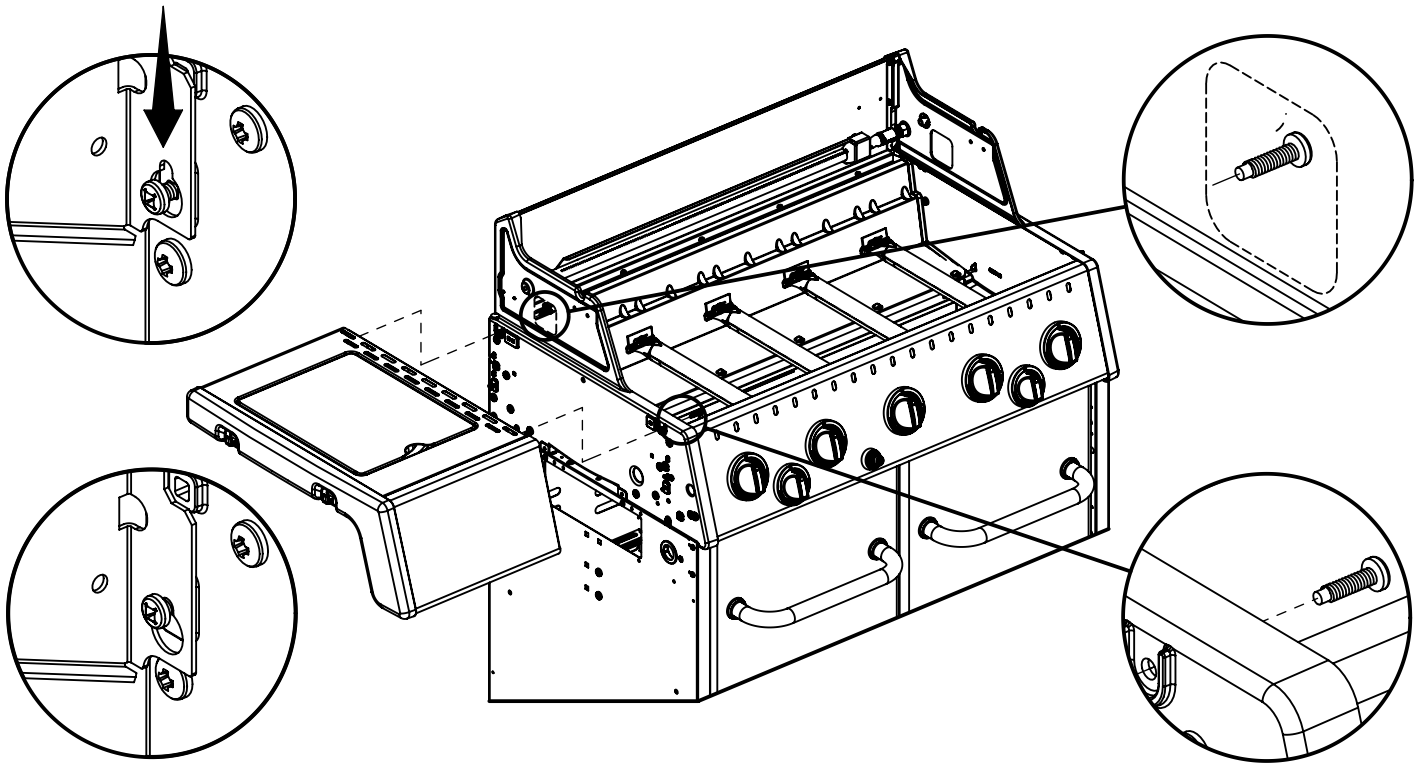

19	(2) 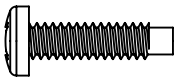

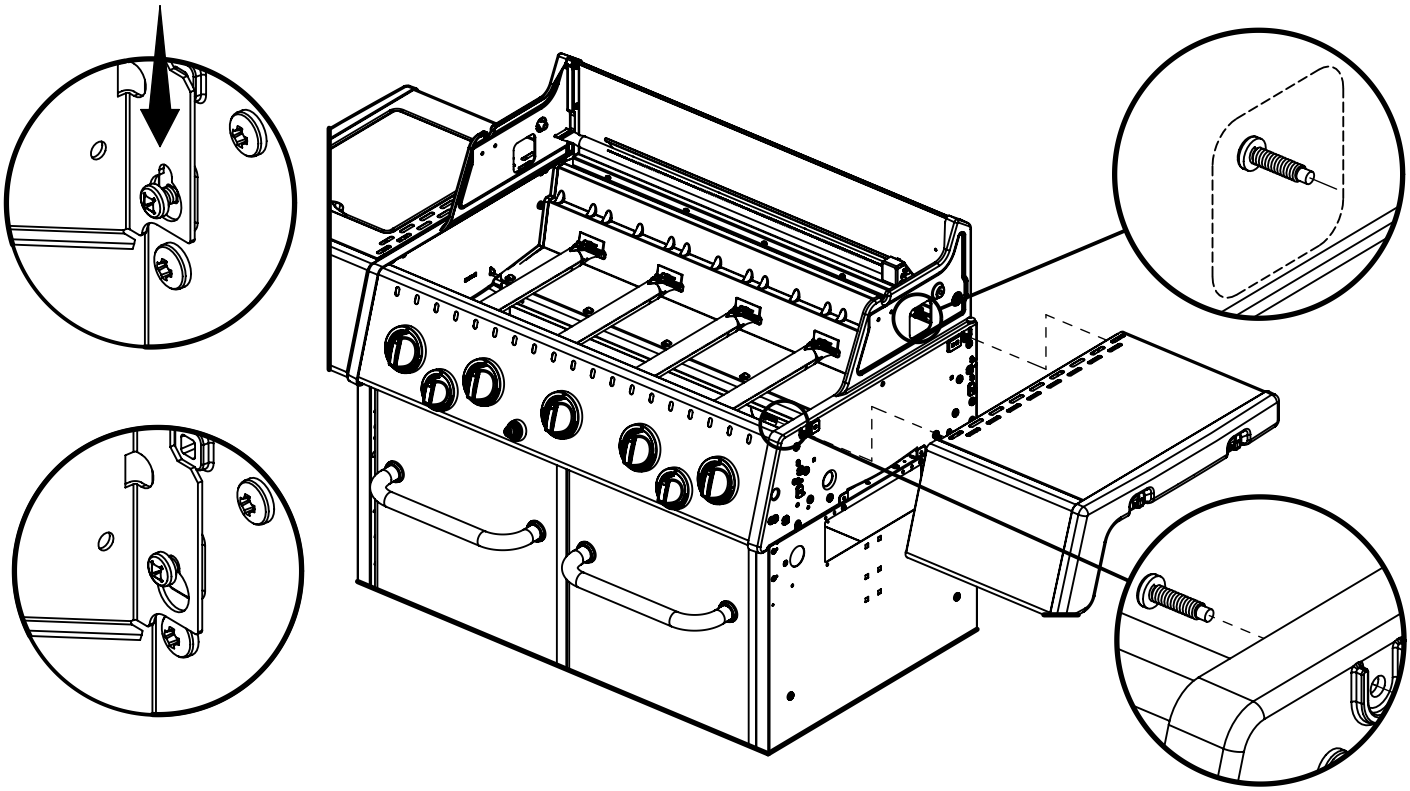

20	(2) 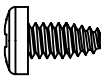 (2) 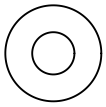

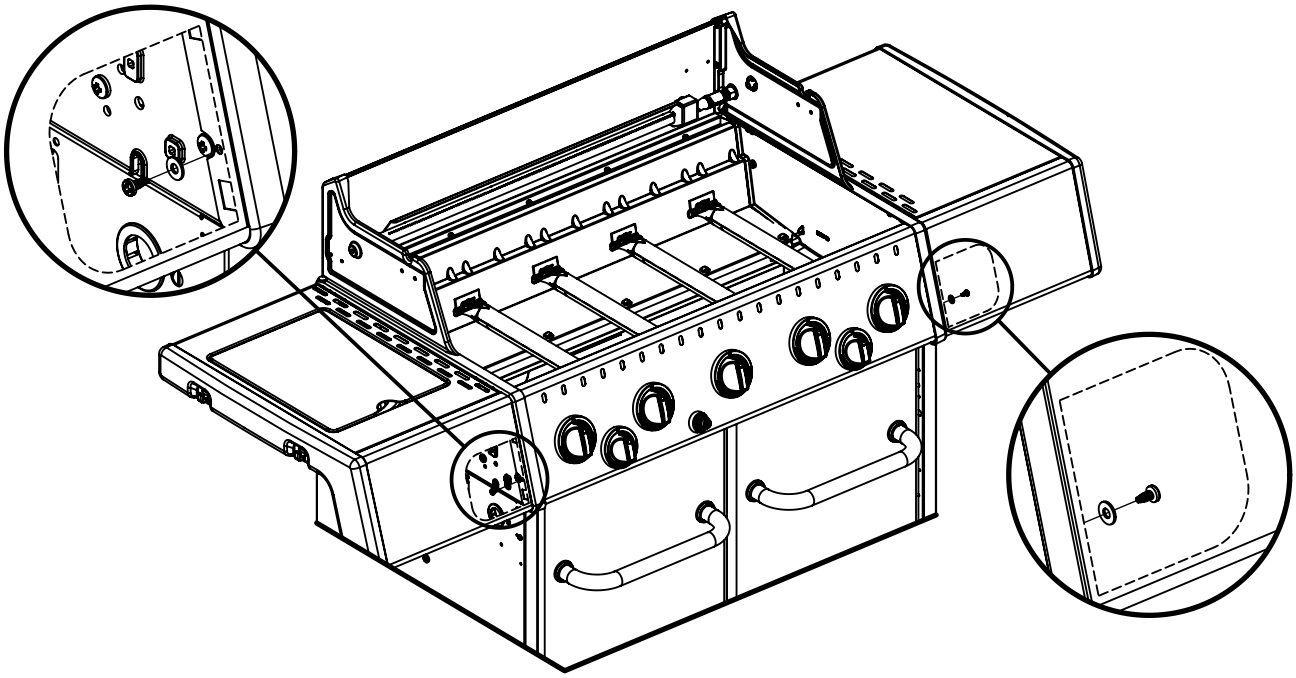

21	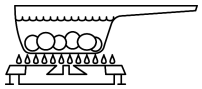	(1) 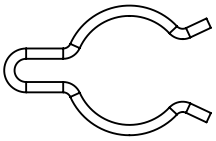

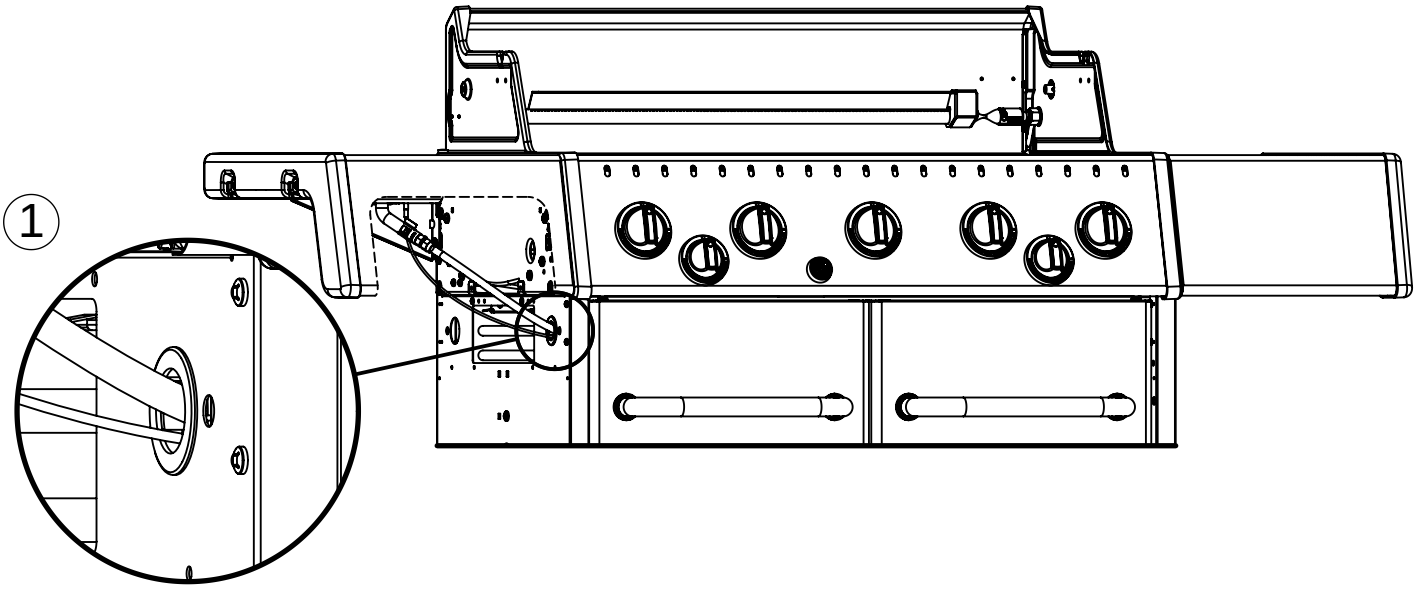

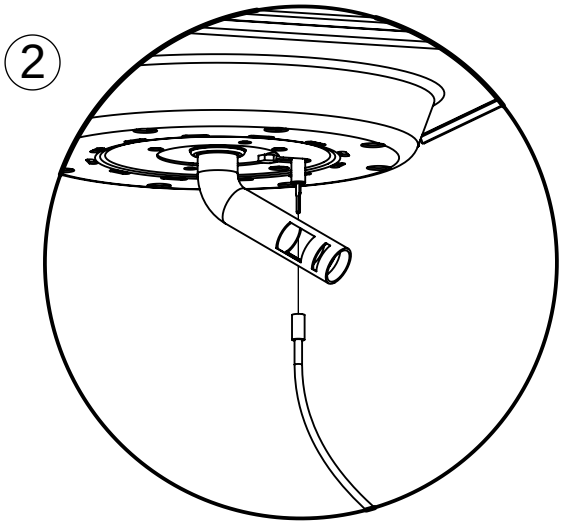

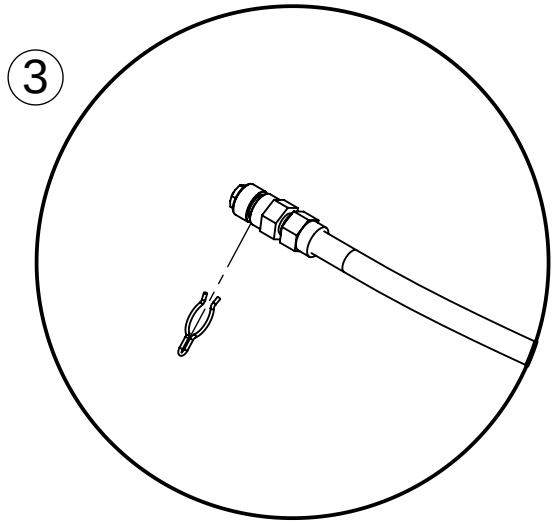

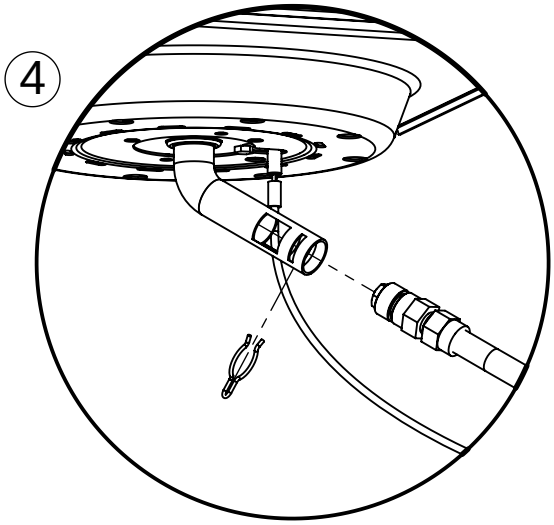

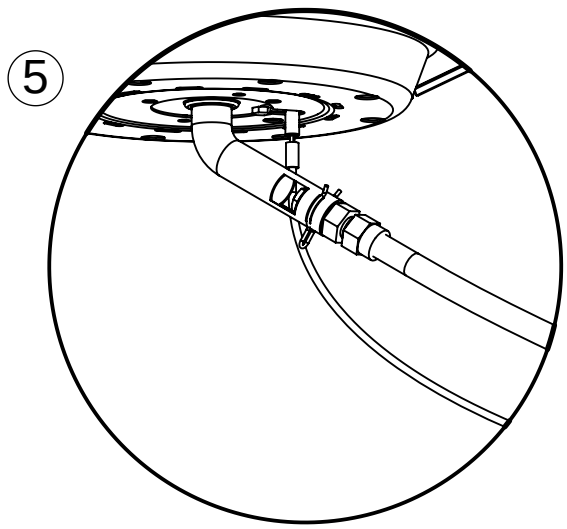

22	

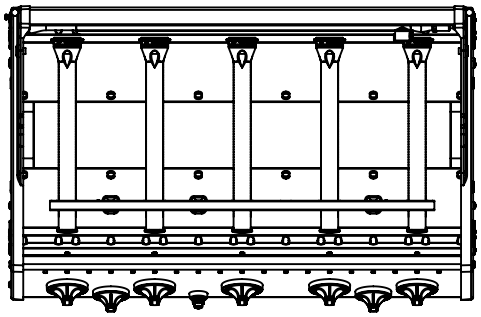

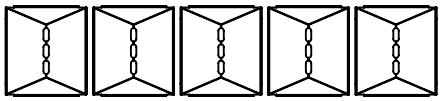

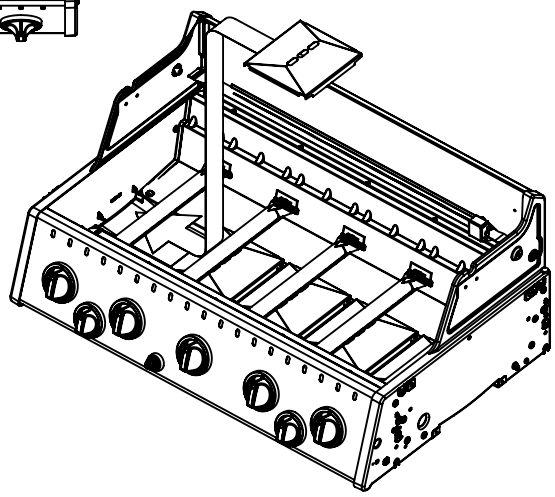

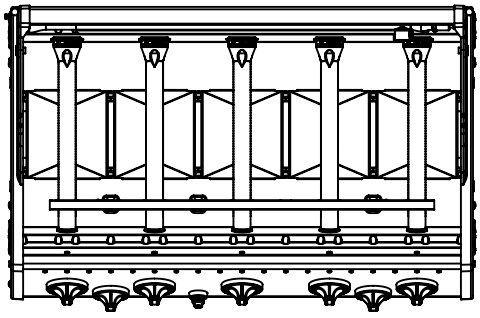

23	

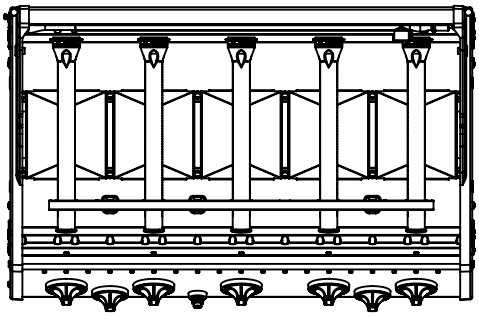

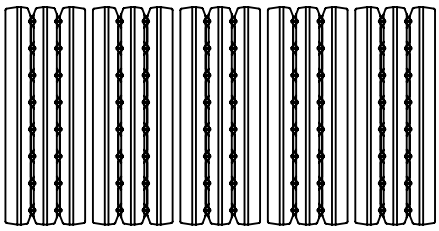

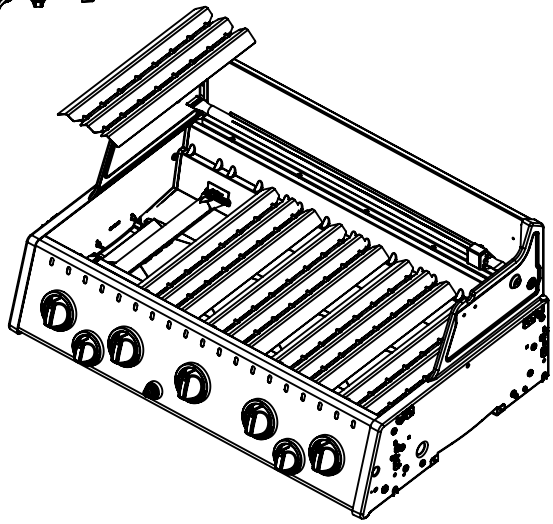

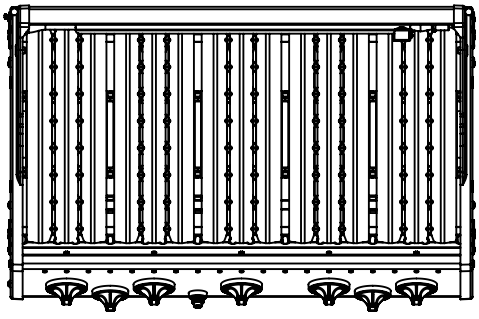

24	(2) 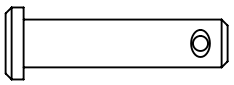 (2) 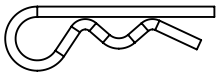

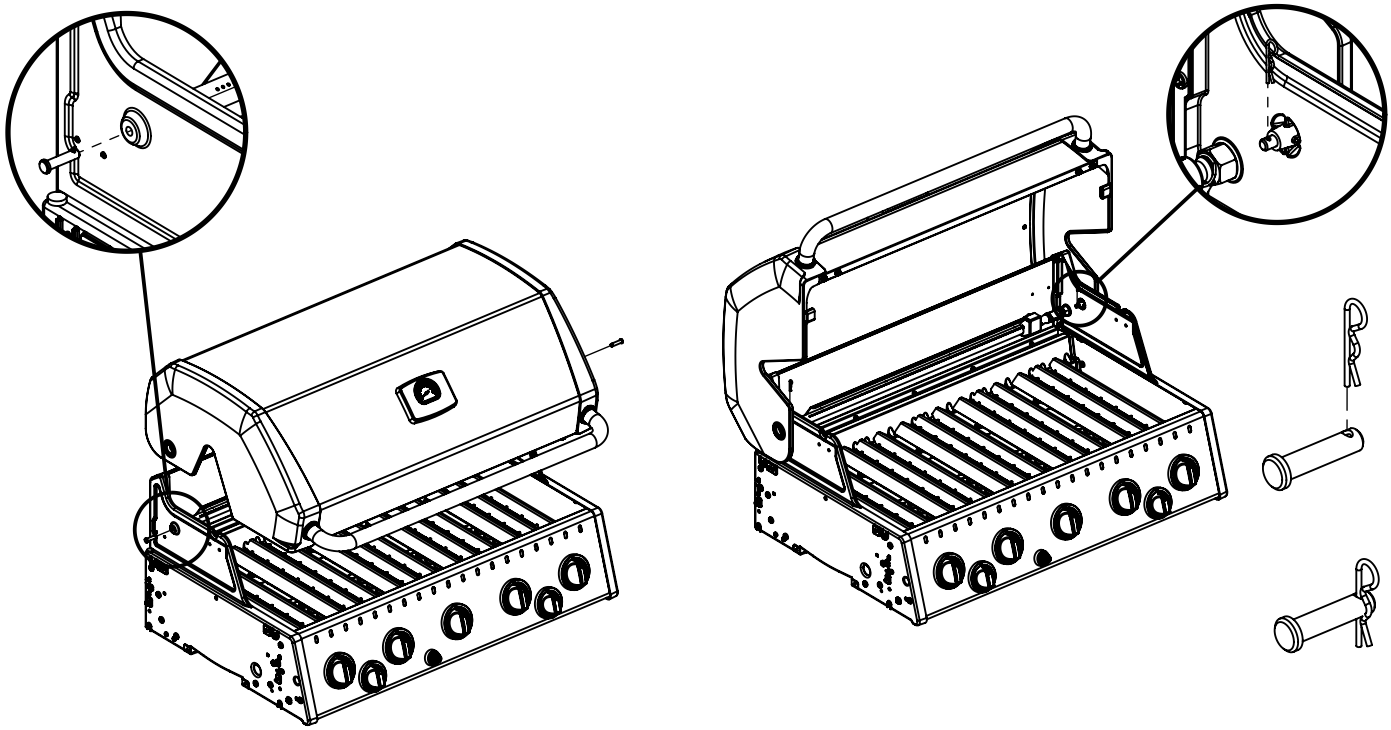

25	

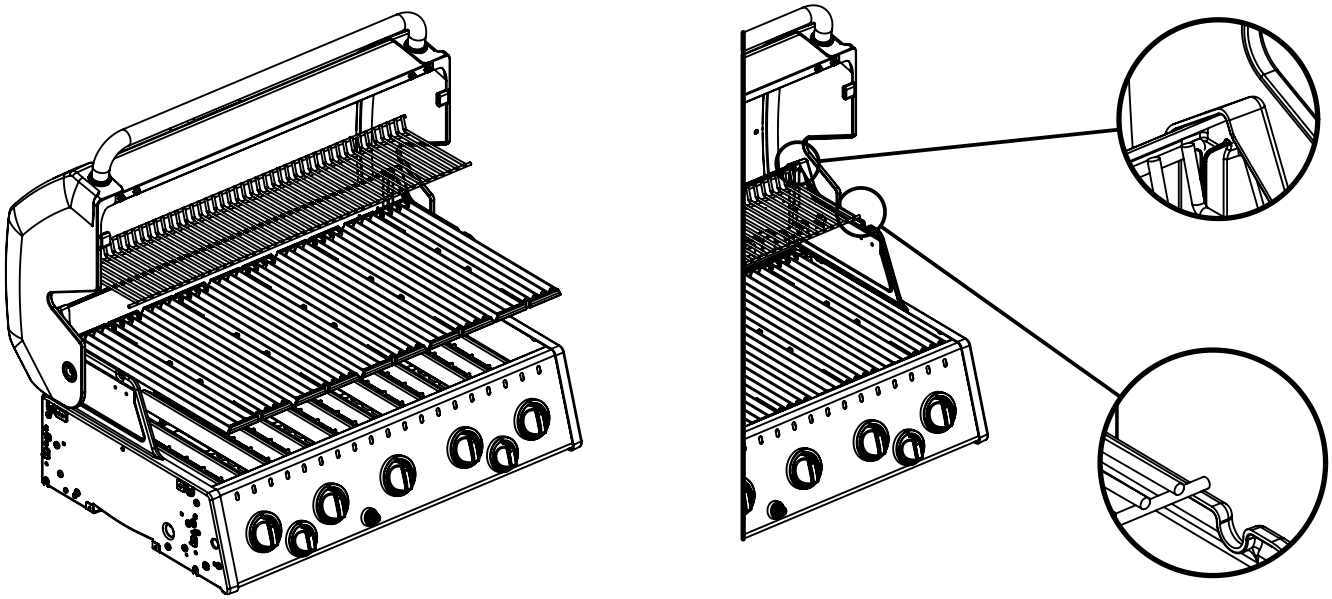

26	(1) 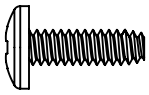 (1) 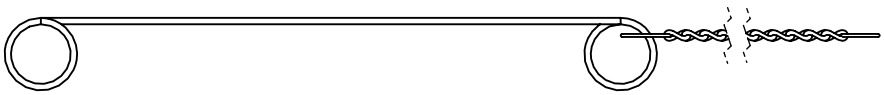

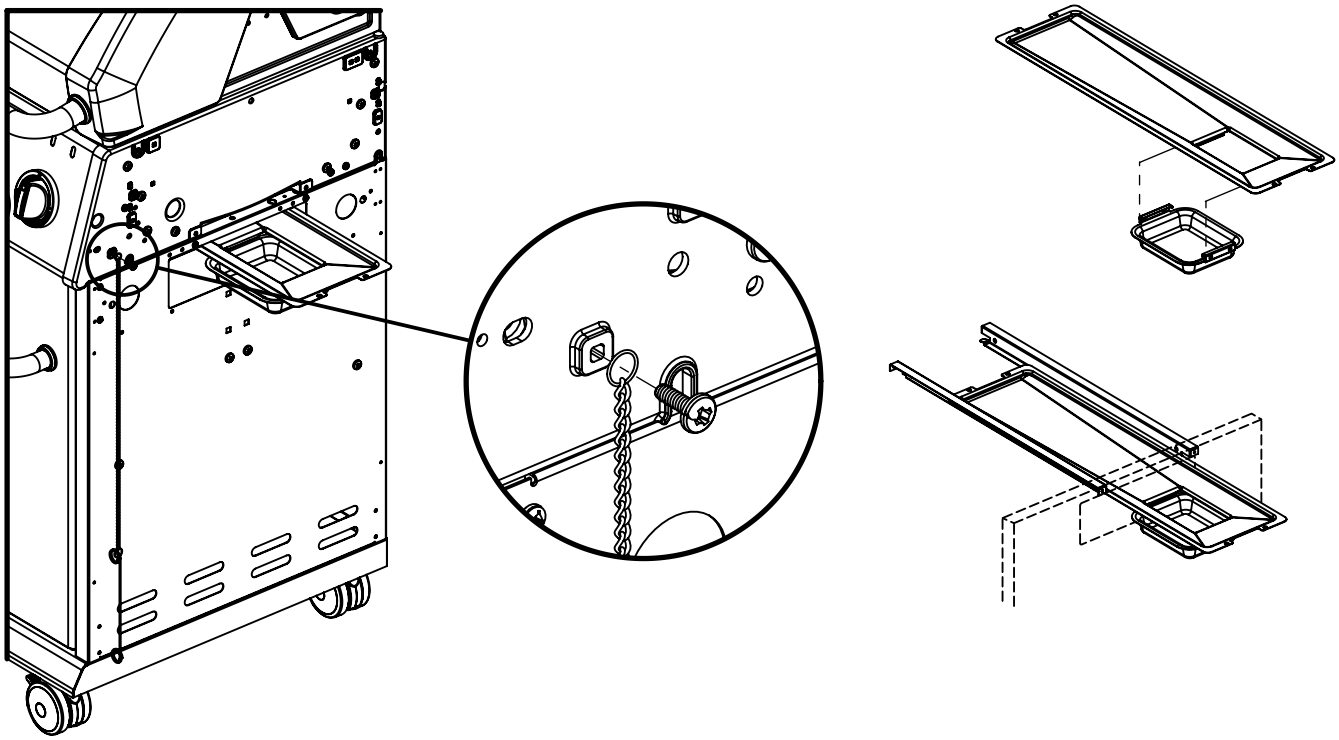

27	

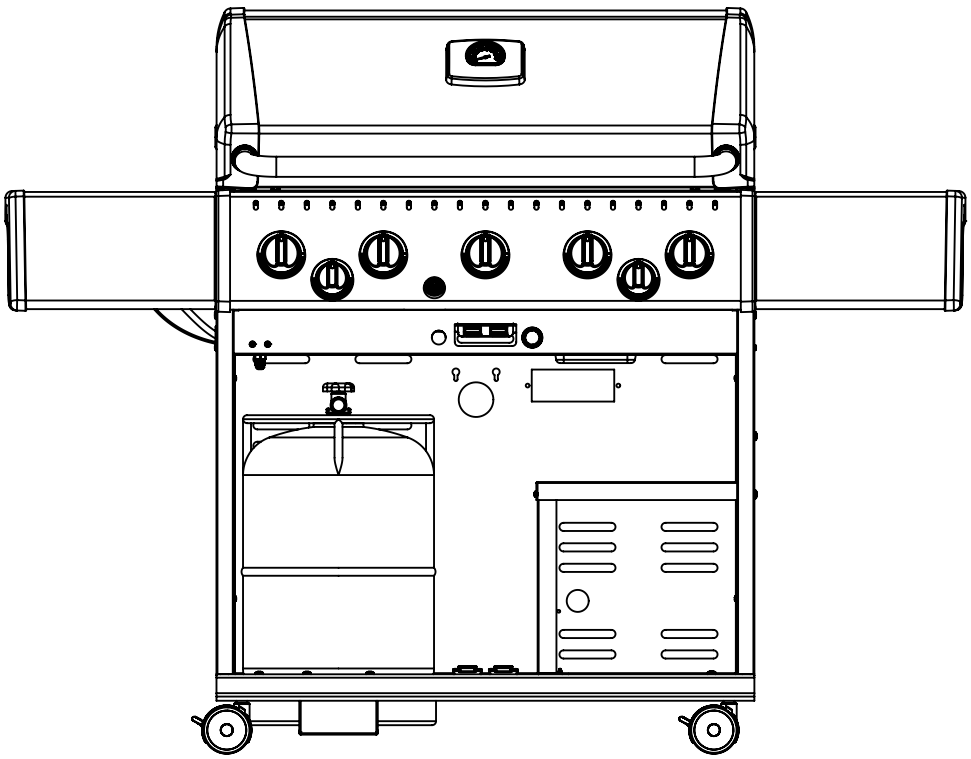

28		(2) 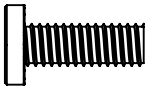 (2) 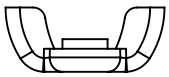

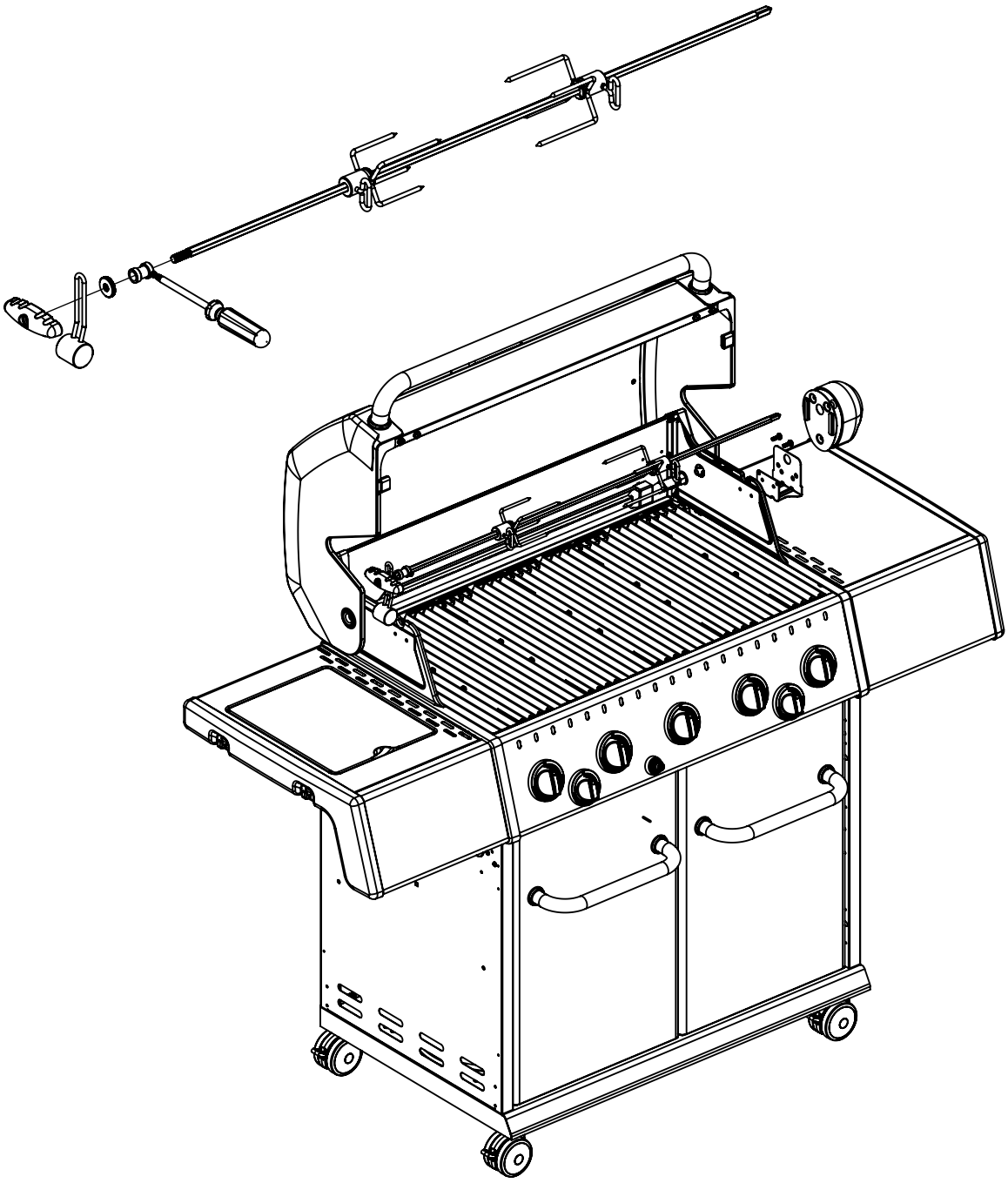

KEY #	ITEM #	DESCRIPTION	9831-82	9831-83	8662-82	KEY #	ITEM #	DESCRIPTION	9831-82	9831-83	8662-82
1	56006-801	LID	1	1	1	77	25208-201	SHELF	1	1	1
5	10081-BK630	NAMEPLATE	1	1	1	78	21036-901	SHELF SUPPORT	1	1	1
6	10571-6	HEAT INDICATOR	1	1	1	80	53001-011A	SIDE SHELF – RIGHT	1	1	1
7	24006-12A	HANDLE	1	1	1	81	53001-031A	SIDE SHELF – LEFT	•	•	•
8	24009-936	HANDLE BEZEL	2	2	2	82	53001-051A	SIDE SHELF – SIDE BURNER	1	1	1
10	52006-274	FIREBOX	1	1	1	86	10390-E10D	SIDE BURNER	1	•	•
15	52226-014A	COLLECTOR BOX	1	1	1		10390-E10E		•	1	1
17	27249-904	GREASE SHEILD	5	5	5		10390-E10NGE		•	•	•
25	52904-144D	BURNER - MAIN	5	•	5	87	53004-271	SIDE BURNER - BODY	1	1	1
	52904-144E		•	5	•	88	53000-251	SIDE BURNER - COVER	1	1	1
	52904-144NGE		•	•	•	89	63139-981	SIDE BURNER GRID	1	1	1
28	52026-304	CONTROL COVER	1	1	1	92	10342-T21	SIDE BURNER ELECTRODE	1	1	1
29	59006-072	CONTROL ASSEMBLY	1	•	•	100	Y-12220	GROMMET	1	1	1
	59006-073		•	1	1	105	S21362	SPRING	1	1	1
30	S13473-073	HOSE - SIDE BURNER	1	•	•	108	10693-099	REAR BURNER ORIFICE	1	•	•
	S13473-079		•	1	1		10693-104		•	1	1
	S13473-132		•	•	•		10693-161		•	•	•
32	10111-15A	HOSE	1	1	1	110	S15271	HANDLE	1	1	1
33	27906-354E	BURNER - ROTISSERIE	1	1	1	111	S15270	BALANCE	1	1	1
34	S15508A	ELECTRODE	1	1	1	112	S15299	WASHER	1	1	1
35	50809-957	MANIFOLD - REAR BURNER	1	1	1	113	S15263	BUSHING	1	1	1
36	Y-11990	NUT HEX	1	1	1	114	S15259	ROTISSERIE ROD	1	1	1
38	22002-268	CONTROL BEZEL	5	5	5	115	S15259	4 PRONG FORK	1	1	1
39	22001-168	CONTROL BEZEL	2	2	2	116	57039-901	ROTISSERIE BRACKET	1	1	1
40	22001-768	CONTROL KNOB – LARGE	5	•	•	125	Y-12835	SCREW - #6 X 1/4	2	2	2
	10472-K431		•	5	5	127	S21125	SCREW - #8 X 3/8	8	8	8
41	22001-668	CONTROL KNOB – SMALL	2	•	•	129	S21124	SCREW - #8 X 1/2	16	16	16
	10472-K231		•	2	2	131	S21136	SCREW - #8-32 X 1/2	7	7	7
42	10342-251	ELECTRONIC IGNITOR	1	1	1	133	Y-12646	SCREW - SHOULDER #8 X 1/2	2	2	2
43a	10342-E12	ELECTRODE	2	2	2	134	Y-29304	SCREW - #10-24 X 3/8	8	8	8
43b	10342-E13	ELECTRODE	1	1	1	135	S35094	SCREW - #10-24 X 5/8	1	1	1
44	52209-404	FLAV-R-WAVE ®	5	5	5	137	S35095	SCREW - #10-24 X 5/8	2	2	2
45a	52005-281	GRID – SINGLE	5	•	•	139	Y-29310	SCREW - #10-24 X 3/4	6	6	6
	52007-181		•	1	1	140	Y-12865	SCREW - 1/4-20 X 1/2	16	16	16
45b	52006-281	GRID – DOUBLE	•	•	•	141	Y-12310	SCREW - 1/4-20 X 3/4	16	16	16
	52002-181		•	2	2	143	Y-11559	SCREW - 1/4-20 X 1	2	2	2
46	52006-991	GRID - WARMING RACK	1	1	1	151	Y-11793	NUT - 1/4-20	4	4	4
47	27056-901	GREASE TRAY	1	1	1	154	S21061	WING NUT #10	2	2	2
48	52009-901	GREASE PAN	1	1	1	160	Y-12857	WASHER	4	4	4
49	21036-991	GREASE TRAY - RAIL	2	2	2	162	Y-12870	WASHER #10	2	2	2
50	51276-231A	DOOR - LEFT HAND	1	1	1	169	Y-11230	SIDE BURNER – RETAINER CLIP	1	1	1
51	51276-211A	DOOR - RIGHT HAND	1	1	1	170	S21235	HINGE PIN	2	2	2
55	21106-13	DOOR HANDLE	2	2	2	171	S21233	HIDGE CLIP	2	2	2
56	21070-13	HANDLE BEZEL	4	4	4	173	10240-20	DOOR HINGE PIN - TOP	2	2	2
60	21109-905	CABINET - SIDE PANEL	2	2	2	175	Y-11551	DOOR SCREW	2	2	2
61	21306-925R	CABINET - REAR PANEL	1	1	1	176	Y-12124	DOOR HINGE COVER	2	2	2
65	51616-235	CABINET - LOWER BASE	1	1	1	177	Y-12222	MAGNET	2	2	2
66	21039-301	TANK BRACKET	1	1	1	178	Y-12223	MAGNET - SNAP IN	2	2	2
67	51336-211	MAGNET BRACKET	1	1	1	181	Y-11231	LID BUMPER - ROUND	4	4	4
68	57139-13	CONNECTION BRAKET	4	4	4	182	20005-000	MATCH LIGHT CHAIN	1	1	1
73	51039-908	CASTER BRACKET	4	4	4	186	Y-11544	BURNER SCREW	5	5	5
74	10892-286	CASTER	4	4	4	187	S21242	CLIP	5	5	5

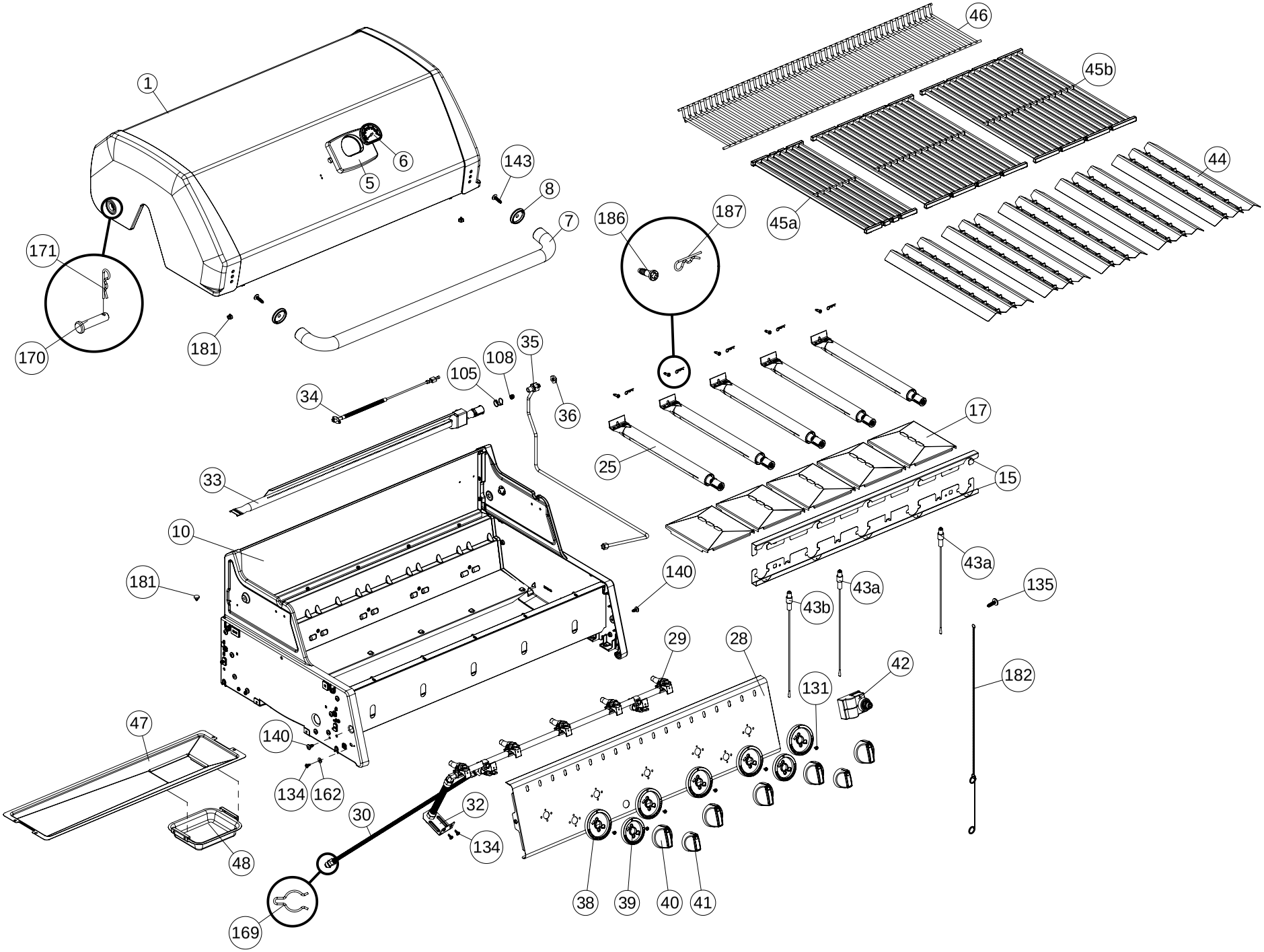
1
6
5
143
8
7
171
170
181
186
187
46
45b
45a
44
105
108
35
34
36
25
17
15
33
10
181
140
43a
43b
135
29
28
42
131
182
47
140
134
162
30
32
134
48
169
38
39
40
41

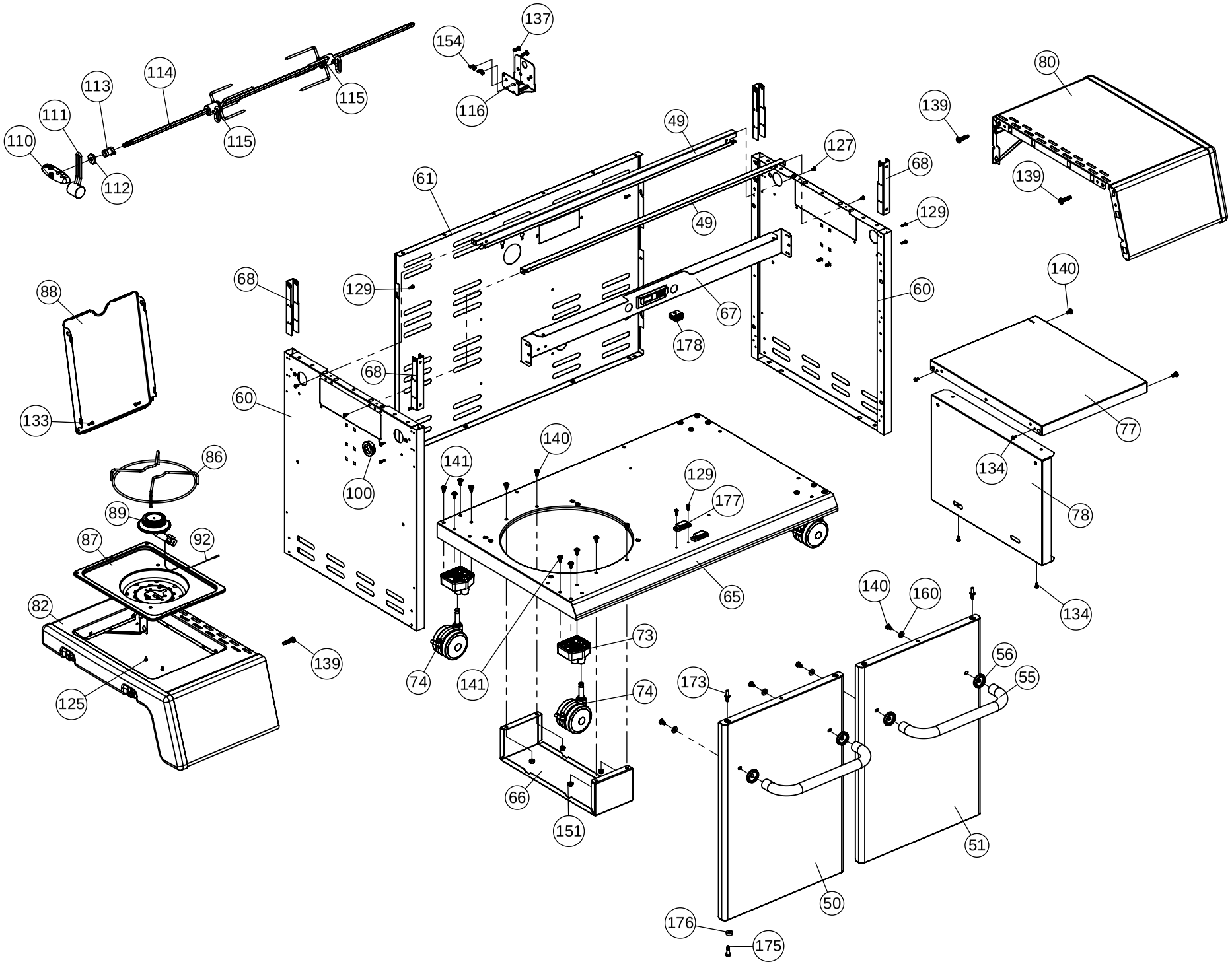

110
111
112
113
114
115
115
154
137
116
80
139
139
49
49
127
68
129
61
129
68
60
67
178
68
60
100
88
133
140
77
134
78
134
86
89
87
92
82
125
139
141
140
129
177
65
74
141
73
74
66
151
140
160
56
55
173
51
50
176
175